1. HW-A650/XY ZZ01

HW-A650/XY ZZ01

Exploded View

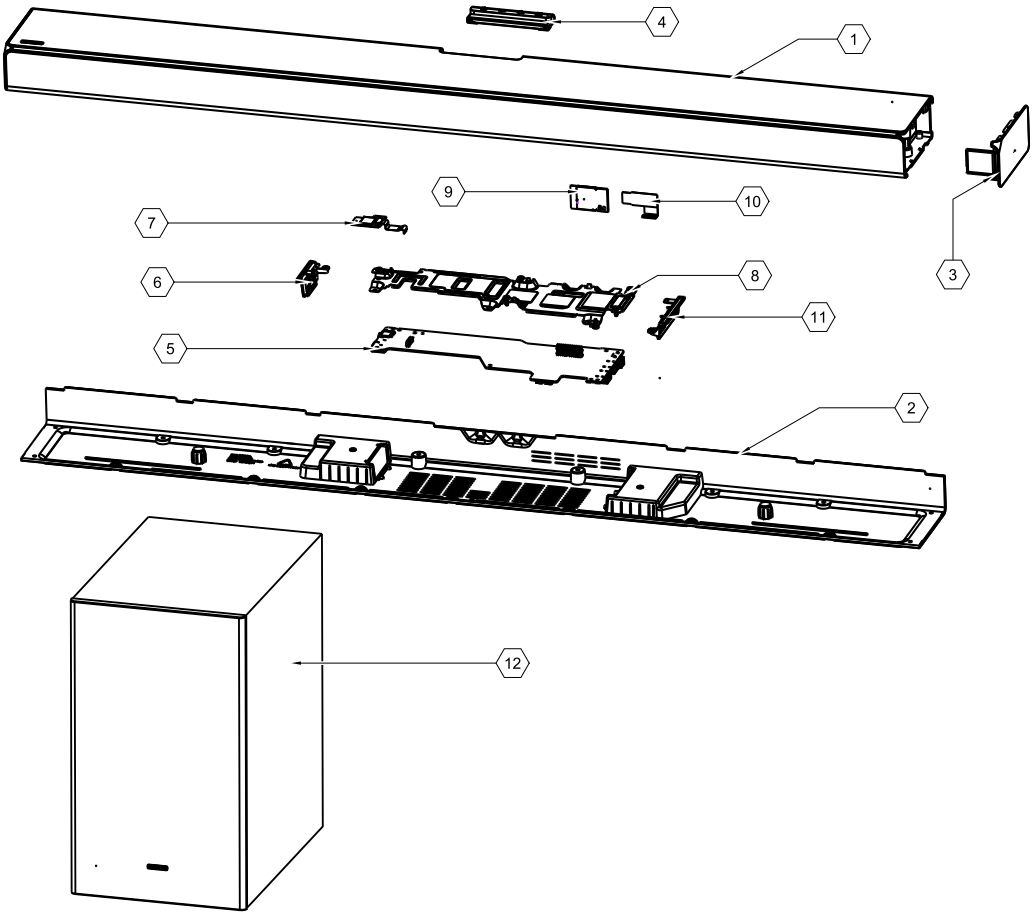

Copyright© 1995-2021 SAMSUNG. All rights reserved.